RD-65

Remote Display

- **Highly Durable–** Powder coated mild steel enclosure (IP65) with wall mount swivel bracket or easy to install hanging rings. Adjustable sun visor included
- **Serial Port–** RS-232, RS-485 or current loop with selection to five protocols, three data formats and 8 types of baud rates
- **Display–** Double row ultra bright large 5", 6 Digit LED Display visible up to 150'
- **Displays up to 999,999 or down to -99,999**
- **Annunciator–** kg, lb, G (gross), N (net)

VALUE IN WEIGHING

RD-65 Remote Display

Specifications

Enclosure:
Powder Coated, Mild Steel
Non Glare Lens

Operating Temperature:
-5° F to 122° F (-15° C to 50° C)

Display:
Display Type: 127 mm (5") 7 segment red LED display
Annunciators: kg, lb, G (gross), N (net)
Display Characters: 999,999 to -99,999

Communication Interface:
Serial Cable Length 10 m (32')
Serial Port: RS-232, RS-485 or Current Loop
Data Format: 8N1, 7E1 or 7O1
Baud Rate: 110, 300, 600, 1200, 2400, 4800, 9600 or 19200
Five Usable Input Protocols

Power:
Input: 120VAC , 60Hz
Transformer Output: 24VAC, 2 Amp (UL, Waterproof)
Current Draw: <1500mA
Fused: 2.0 amp

Shipping Specifications:
Weight: 20 kg (45 lb)
Package Dimensions:
464 mm x 448 mm x 999 mm (39.3" x 18.3" x 17.6")

Warranty:
One Year from Shipment

Product Code:
816965004638

Dimensions

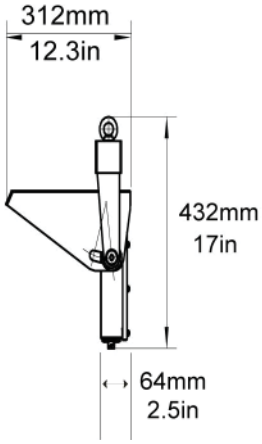

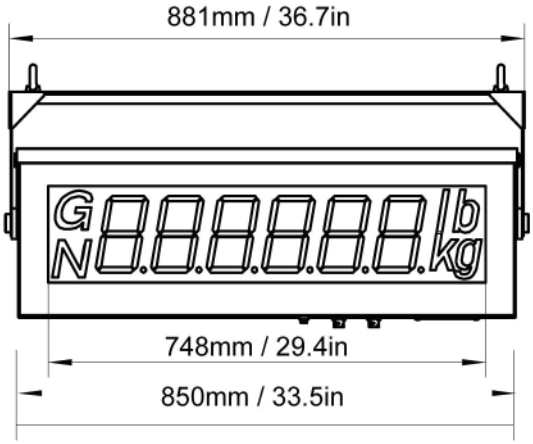

Salter Brecknell Weighing Products

a division of Avery Weigh-Tronix, LLC

R.D. Jacobs Company
500 Southeast Thirteenth Street
Fort Lauderdale, Florida 33316
Phone: 954.462.1932
Fax: 954.527.4466
email: info@dynamometers.com

© Avery Weigh-Tronix group of companies 2010. All rights reserved. Salter Brecknell is a registered trade mark of the Avery Weigh-Tronix group of companies. This publication is issued to provide outline information only which, unless agreed by an Avery Weigh-Tronix group`writing, may not be regarded as a representation relating to the products or services concerned. This publication was correct at the time of going to print however, Avery Weigh-Tronix reserves the right to alter without notice the specification, design, price or conditions of supply of any product or service at any time.
A